DP-Shank-Core-Box-Cutter C869-1

Cutting Material	Number of Teeth	Feed	Bonded
DP	Z 2	MEC	

Design:
- Tool body in steel
- With two DP cutting edges
- Resharpenable1 to 2 times
- Shank fit h6

Application:
- For the production of decorative grooves and profiling of mouldings

Workpiece Material:
- Panel materials

Machine:
- CNC machining centres

Scope of Supply:
- From shank 16 always with a length adjusting screw;
  With use in shrink chuck HSK-F 63 (C915)
  without a length adjusting screw
- Optionally also assembled (and balanced) (MS):
  Assembled in shrink chuck HSK-F 63 (C915): C869-1....-M1
  Assembled in collet chuck HSK-F 63 (C910): C869-1....-M2

Special Features:
- Suitable for moulding milling of compact panels

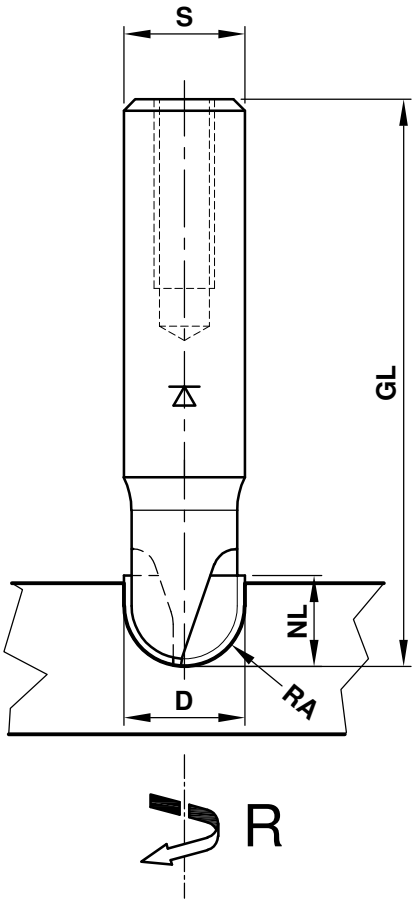

D	RA	NL	GL	S	Z	R/L	n max.	Ident-No.
8	4	9	70	12	2	R	24000	C869-140R
10	5	9	70	12	2	R	24000	C869-150R
12	6	10	70	12	2	R	24000	C869-160R
13	6.5	10.5	70	12	2	R	24000	C869-165R
14	7	12	75	16	2	R	24000	C869-170R
16	8	12	75	16	2	R	24000	C869-180R
18	9	15	80	16	2	R	24000	C869-190R
20	10	15	85	20	2	R	24000	C869-1100R

Aigner WERKZEUGE
e-mail:office@aigner-werkzeuge.at
www.aigner-werkzeuge.at

MS.....Machine Adaptor
Z.....No. of Teeth
n max.....Max. Speed (rpm)

Blattformat: **A4** All dimensions in mm
Zchng.-Nr. KW.48691.4 | 01

C869-1