PM-Ball-Head-End-Mill

C830

Cutting Material	Number of Teeth	Feed	Replace
TC	Z 2	MEC	

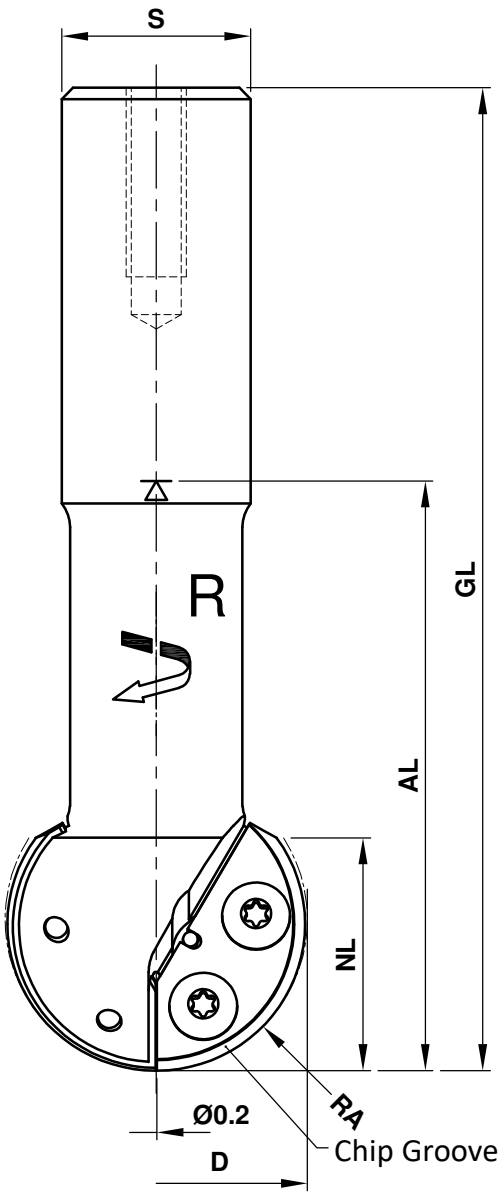

Design:
- Tool body in Q & T steel
- Shank fit h6
- TC profile cutter with chip groove

Application:
- Generation of segmental of semi-circular circular relief structures or mouldings
- Face milling and finish milling of round or oval mouldings or contours

Workpiece material:
- Solid wood and panel materials

Machine:
- CNC machining centres

Scope of supply:
- Tool body including profile cutter
- Key with handle Torx T15
- Principally with a length setting screw:
  For use with shrink chucks HSK-F 63 (C915)
  without a length setting screw
- Also optionally assembled (and balanced) (MS):
  Assembled in shrink chuck HSK-F 63 (C915): C830-....-M1
  Assembled in collet chuck HSK-F 63 (C910): C830-....-M2

Special features:
- Z2 design up to the centre
- Profile cutter with chip flute design for the generation of improved workpiece surfaces

D	RA	NL	AL	GL	S	Z	R/L	n max.	Ident-No.
40	20	30	78	130	25	2	R	18500	C830-200078R
45	22.5	27	83	135	25	2	R	17000	C830-225083R
50	25	39	83	135	25	2	R	16500	C830-250083R
60	30	41	88	140	25	2	R	15500	C830-300088R
70	35	44	85	137	25	2+2	R	14250	C830-350085R
80	40	45	78	130	25	2+2	R	14000	C830-400078R
90	45	48	72	124	25	2+2	R	12250	C830-450072R
100	50	60	70	122	25	2+2	R	12000	C830-500070R

Aigner WERKZEUGE
e-mail:office@aigner-werkzeuge.at
www.aigner-werkzeuge.at

MS.....Machine Adaptor
Z.....No. of teeth
n max.....Maximum Rotational Speed (rpm)

Blattformat: **A4** | All dimensions in mm
Zchng.-Nr. KW.48300.4 | 01

C830

Spare Parts

Description	Qty.	Dimensions	MBM	Ident-No.
Profile Cutter R20	2	35x16x2	2	PM.47205.5/U20
Profile Cutter R22.5	2	35x16x2	2	PM.47206.5/U20
Profile Cutter R25	2	50x20x2	2	PM.47207.5/U20
Profile Cutter R30	2	50x20x2	2	PM.47208.5/U20
Profile Cutter R35	2	35x16x2	2	PM.63640.5/U20
	2	30x16x2	2	PM.63641.5/U35
Profile Cutter R40	2	35x16x2	2	PM.47209.5/U20
	2	35x18x2	2	PM.47210.5/U35
Profile Cutter R45	2	35x16x2	2	PM.63642.5/U20
	2	40x18x2	2	PM.63643.5/U35
Profile Cutter R50	2	50x18x2	2	PM.47283.5/U20
	2	40x19x2	2	PM.47284.5/U35
Round Headed Screw	2	M4x6 (head D9) Torx T15	10	KW.44237.5

Aigner WERKZEUGE
e-mail:office@aigner-werkzeuge.at
www.aigner-werkzeuge.at

MBM.....Minimum Order Quantity

Blattformat: **A4** All dimensions in mm

Zchng.-Nr. KW.48300.4 00