CNC Assembly Block C720

Design:
- Two-part clamping jaws made of high-quality lightweight metal, mounted on a stable base
- Clamping of chucks or arbors via quick-release lever

Application:
- For easy and secure mounting and setting of boring tools on milling arbors, or shank tools in collet chucks or other clamping systems

Special features:
- Secure clamping of CNC tools
- Assembly block must be mounted on a workbench or similar surface

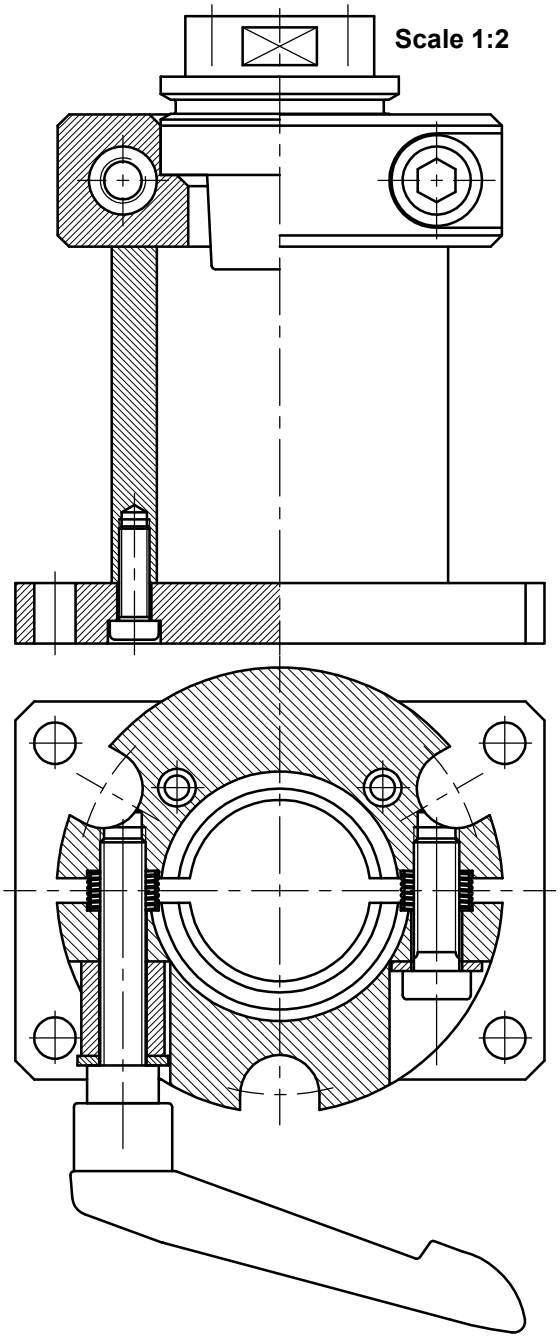

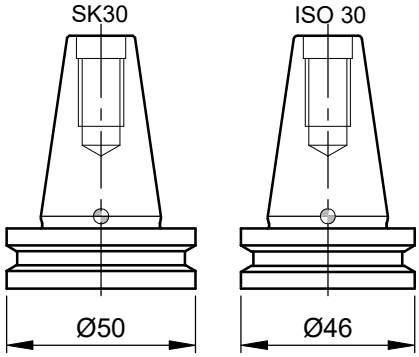

Type	Ident-No.
SK30	C720-SK30
SK40	C720-SK40
HSK50F	C720-HSK50F
ISO 30	C720-IS30
ISO 30 mit Zahnkranz	C720-ISO30Z
HSK63A/B/C/D/E/F	C720-HSK63F
HSK 80 C	C720-HSK80C
HSK 100 F	C720-HSK100F
HSK 85 WE	C720-HSK85WE
HSK 32 E	C720-HSK32E
HSK 40 E	C720-HSK40E

Aigner WERKZEUGE
e-mail:office@aigner-werkzeuge.at
www.aigner-werkzeuge.at

Blattformat: **A4** | all dim. in mm
Zchng.-Nr. KW.47200.4 | 01

C720