DP-Jointing-Cutter Konstantin®

C420-3

Cutting Material	Feed	Number of Teeth
DP	MEC	Z 2

Design:
- Jointing cutter head with replaceable DP cutters
- Tool body in light alloy
- Cutting elements tipped with DP (DIA)
- Drawing cut
- Low-noise design
- Can be re-sharpened 2 to 3 times

Application:
- For low-noise jointing of panel materials

Workpiece material:
- Panel materials

Machine:
- CNC machining centres

Scope of supply:
- Tool body including DP cutters
- Torx key T25
- Also optionally assembled (and balanced) (MS):
  Mounted on milling arbor
  HSK-F 63 (C905-4530xx): C420-...-F1
  Mounted on milling arbor
  HSK-F 63 (C905-8030xx): C420-...-F2

Special features:
- Pure jointing cutter without spurs

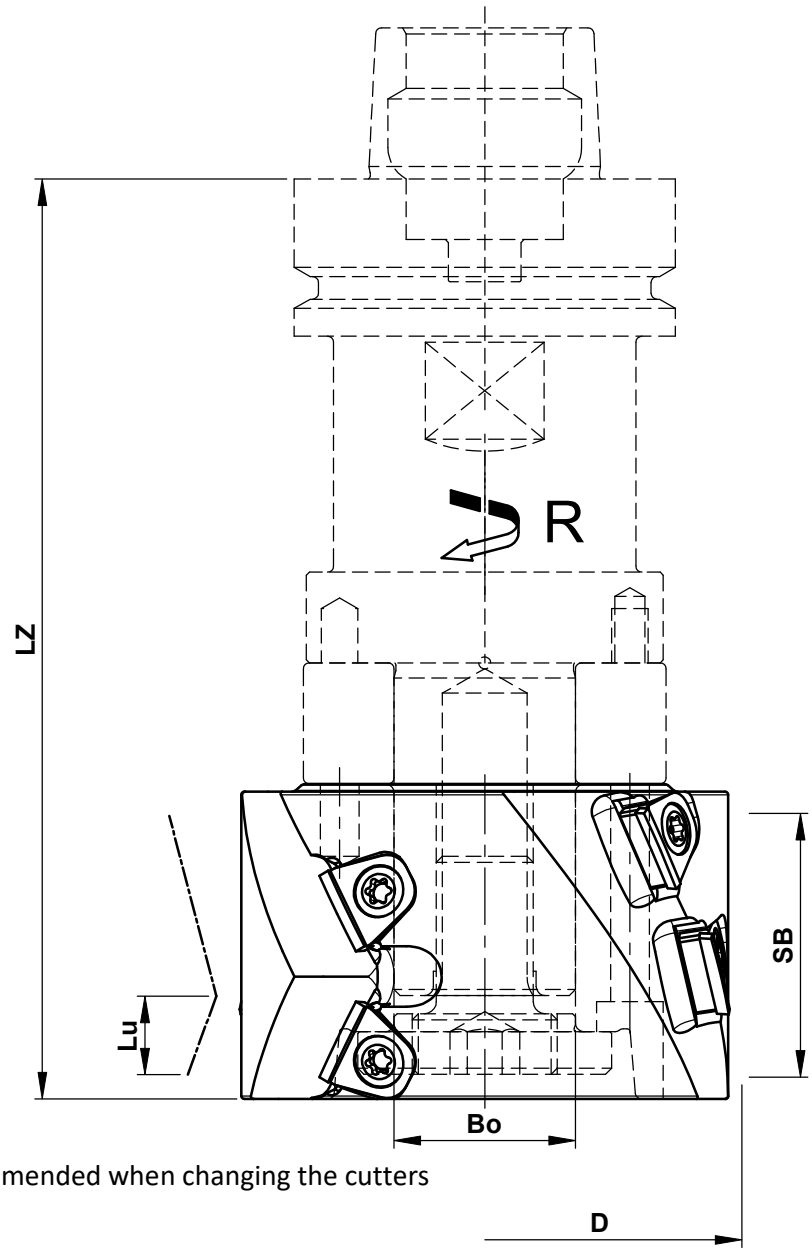

Additional Information:
- A torque wrench (see C986-D315) is recommended when changing the cutters

Aigner WERKZEUGE
e-mail:office@aigner-werkzeuge.at
www.aigner-werkzeuge.at

MS.....Machine Adaptor

Blattformat: **A4** | All dimensions in mm

Zchng.-Nr. KW.44203.4 | 01

C420-3

DP-Jointing-Cutter Konstantin®

C420-3

D	SB	Lu	Bo	LZ	Z	R/L	n max.	Ident-No.
85	43.6	12	30		2x4	R	15500	C420-38544R
85	43.6	12	30	117.1	2x4	R	15500	C420-38544R-F1
85	43.6	12	30	152.1	2x4	R	15500	C420-38544R-F2
85	54	12	30		2x5	R	15500	C420-38554R
85	54	12	30	117.1	2x5	R	15500	C420-38554R-F1
85	54	12	30	152.1	2x5	R	15500	C420-38554R-F2
85	54	12	30		2x5	L	15500	C420-38554L
85	54	12	30	117.1	2x5	L	15500	C420-38554L-F1
85	54	12	30	152.1	2x5	L	15500	C420-38554L-F2
85	64.5	12	30		2x6	R	15500	C420-38564R
85	64.5	12	30	117.6	2x6	R	15500	C420-38564R-F1
85	64.5	12	30	152.6	2x6	R	15500	C420-38564R-F2
85	64.5	12	30		2x6	L	15500	C420-38564L
85	64.5	12	30	117.6	2x6	L	15500	C420-38564L-F1
85	64.5	12	30	152.6	2x6	L	15500	C420-38564L-F2
85	106	12	30		2x10	R	15500	C420-385106R
85	106	12	30	159.1	2x10	R	15500	C420-385106R-F1
85	106	12	30	194.1	2x10	R	15500	C420-385106R-F2

Spare Parts

Description	Qty.	Dimensions	MBM	Ident-No.
DP main cutter	1	14.5x14.1x4.7	2	KW.97927.4/B02
Clamping screw main cutter	1	Tapered screw T25 M6x14	10	KW.93706.4-14

Aigner WERKZEUGE
e-mail:office@aigner-werkzeuge.at
www.aigner-werkzeuge.at

Z.....No. of teeth
n max.....Maximum Rotational Speed (rpm)
MBM.....Minimum Order Quantity

Blattformat: **A4** All dimensions in mm
Zchng.-Nr. KW.44203.4 | 00

C420-3